SERBIAN JOURNAL OF ELECTRICAL ENGINEERING
Vol. 11, No. 3, October 2014, 457-464

UDC: 621.68:621.313.84 DOI: 10.2298/SJEE1403457M

Linear Peristaltic Pump Based on Electromagnetic Actuators

Lotfi Maddoui[1], Fatima Zohra Kadid[1], Rachid Abdessemed[1]

Abstract: In this paper a study and design of a linear peristaltic pump are presented. A set of electromagnetic (solenoid) actuators is used as the active tools to drag the liquid by crushing an elastic tube. The pump consists of six serially-connected electromagnetic actuators controlled via an electronic board. This may be considered as a simulated peristalsis action of intestines. The dynamic performances of the pump are investigated analytically and experimentally.

Keywords: Linear peristaltic pump, Electromagnetic actuator, Crushing jaw, Flow rate.

1 Introduction

In some applications the transferred fluid has to be totally isolated from direct contact with the moving parts of the pump and never exposed to air, this requirement is well fulfilled by the use of peristaltic pumps. In the conventional cylindrical aspect of peristaltic pump, a revolving rotor is used to apply a radial force, via a set of rotating rollers, on an elastic tube. As the rotor turns, the part of the tube under compression closes and forces the liquid to move through the tube. When the tube returns to its natural state, it induces a liquid aspiration in the pump. The flow rate of the pump is controlled by the rotation speed of the rotor whereas the pressure is controlled through the rotor developed torque. In the linear peristaltic pump prototype, a set of six independent crushing actuators is mounted in a linear configuration as shown in Fig. 1. They are the active tools in the pumping action instead of rotating rollers. This configuration presents the advantage of eliminating all the mechanical and electrical problems related to the motor and its speed/torque control system, even a bidirectional liquid flow feature is possible with this linear configuration. The actuators may be piezoelectric [1], pneumatic [2], electrostatic [3], magnetic fluids [4] or electromagnetic.

In this paper, we study the linear peristaltic pump using the finite volume method and the obtained results are compared to the experimentally ones. The

[1]University of Hadj Lakhdar Batna, Electrical Engineering Department, LEB Research Laboratory, 05000 Batna, Algeria; E-mails: lotfi.maddoui@roche.com; fzohra_kadid@hotmail.com

realized pump produces a controllable flow rate up to 150 ml/min and a controllable liquid pressure up to 300 mbar.

2 Pump Structure and Transfer Mechanism

Six crushing actuators are mounted in a series configuration as indicated in Fig. 2. An elastic tube is well stretched and fixed so it is always kept within the jaws of all the six crushers. The control signals that drive the actuators are generated by an electronic circuit board. When the actuator is supplied via a transistor switch, its upper jaw is pulled down and crushes hermetically the tube without damaging it (Fig. 3). So that, the liquid quantity which is under the jaw is shift ahead.

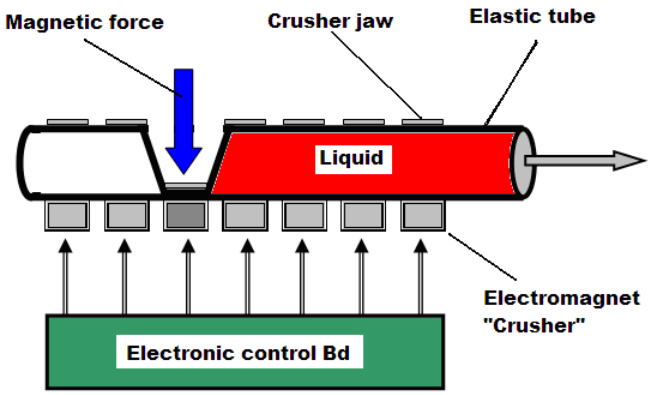

Fig. 1 – *Structure of a Linear peristaltic pump.*

Fig. 2 – *Manufactured peristaltic pump.*

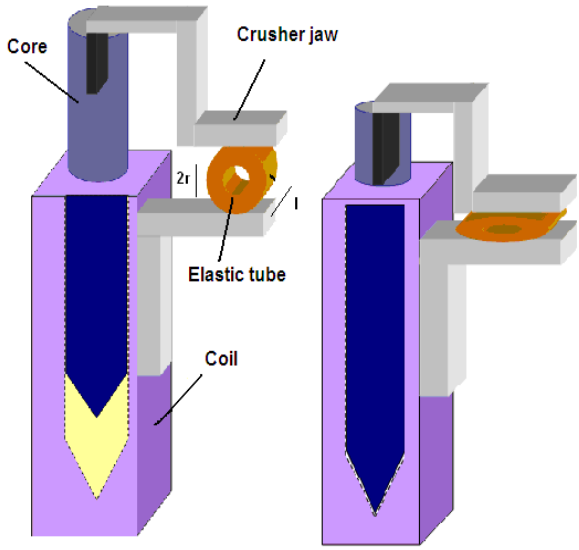

Fig. 3 – *Electromagnetic crusher action.*

If the actuators are supplied energized one after the other from left to right the pumping action will take place. In order to ensure significant liquid transfer through actuator's actions, the actually activated actuator must remain energized, i.e. tube well tightened, till the complete action of the next actuator so reverse liquid flow is prevented. It means that a time delay should be introduced at the end of each actuator's control period; except for the last one (sixth: end of the cycle). Otherwise, the liquid will move backward when actuator number one is supplied (starting the of cycle). The pressure and the flow rate may be controlled by changing the frequency (0.1 Hz step) and voltage fed to the actuators. Moreover, the sequence of supplying the actuators may be adjusted from the electronic board in order to achieve desired flow rate and flow direction [1].

3 Mathematical Aanalysis and Numerical Method

The Maxwell equations and Ohm's law are used to describe the behaviour of the electromagnetic actuator:

$$\mathrm{rot}\,\boldsymbol{E} = -\frac{\partial \boldsymbol{B}}{\partial t}, \tag{1}$$

$$\mathrm{rot}\,\boldsymbol{H} = \boldsymbol{J}_s, \tag{2}$$

$$\mathrm{div}\,\boldsymbol{B} = 0, \tag{3}$$

$$\operatorname{div} \boldsymbol{D} = 0 , \tag{4}$$

$$\boldsymbol{J}_{ind} = \sigma\left(\boldsymbol{E} + \boldsymbol{v} \times \boldsymbol{B}\right) , \tag{5}$$

$$\boldsymbol{B} = \mu \boldsymbol{H} . \tag{6}$$

The differential equation describing each actuator is given as a function of the magnetic potential vector $\boldsymbol{A}$ by (7). After rearrangements, a 2D partial differential equation is given by (8).

$$\operatorname{rot}\left(\frac{1}{\mu}\operatorname{rot}\boldsymbol{A}\right) + \operatorname{rot}\boldsymbol{A} = \boldsymbol{J}_{ex} , \tag{7}$$

$$\frac{1}{\mu}\left(\frac{\partial^2 A}{\partial x^2} + \frac{\partial^2 A}{\partial y^2}\right) = -J_{ex} . \tag{8}$$

Since each actuator is supplied by a dc current at a relatively low frequency (less than 2 Hz), the terms depending on time are omitted. The finite volume method, as shown in Fig. 4, is used as a discretization method to solve the differential equation (8).

$$\int_w^e \int_s^n \left[\frac{1}{\mu}\left(\frac{\partial^2 A}{\partial x^2} + \frac{\partial^2 A}{\partial y^2}\right)\right] \mathrm{d}x\,\mathrm{d}y = \int_w^e \int_s^n (-J_{ex})\,\mathrm{d}x\,\mathrm{d}y . \tag{9}$$

The finite volume method transforms the partial differential equation (9) to a set of algebraic equations of the form given by (10). This equation may be solved using a conventional iterative method [5].

$$a_P A_P = a_W A_W + a_E A_E + a_N A_N + a_S A_S + d_P , \tag{10}$$

where

$$a_E = \frac{\Delta y}{\mu_e \delta y_e} ; \quad a_W = \frac{\Delta y}{\mu_w \delta y_w} ;$$

$$a_N = \frac{\Delta y}{\mu_n \delta y_n} ; \quad a_S = \frac{\Delta y}{\mu_s \delta y_s} ;$$

$$d_p = J_{ex} \Delta x \Delta y ; \quad a_P = a_E + a_W + a_N + a_S .$$

4 Results and Discussions

The results of simulation on Fig. 5 and Fig. 6 show the distribution of the magnetic vector potential $\boldsymbol{A}$ inside and around the actuator at the beginning (the crusher is open) and at the end of the plunger movements (the crusher is closed) respectively. Fig. 7 shows the distribution of the average flux density $\boldsymbol{B}_m$ at the beginning and at the end of the plunger movements.

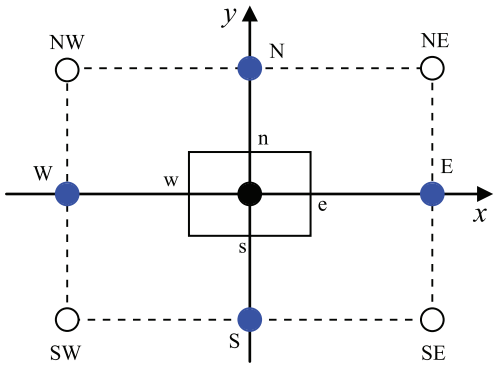

Fig. 4 – *Description of the finite volume.*

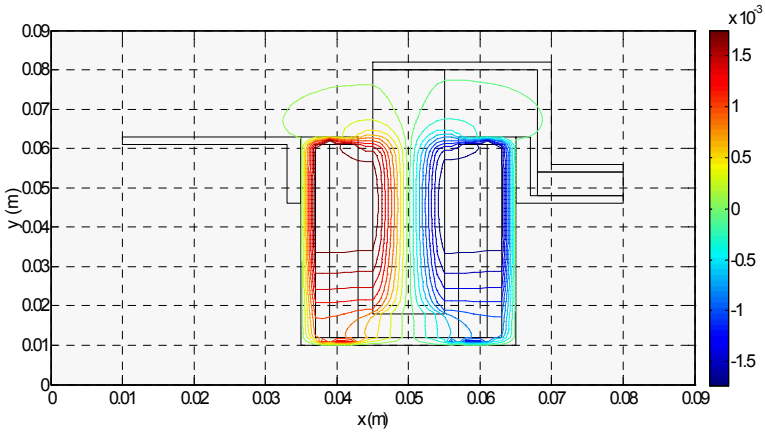

Fig. 5 – *The distribution of the electromagnetic vector potential (Open crusher).*

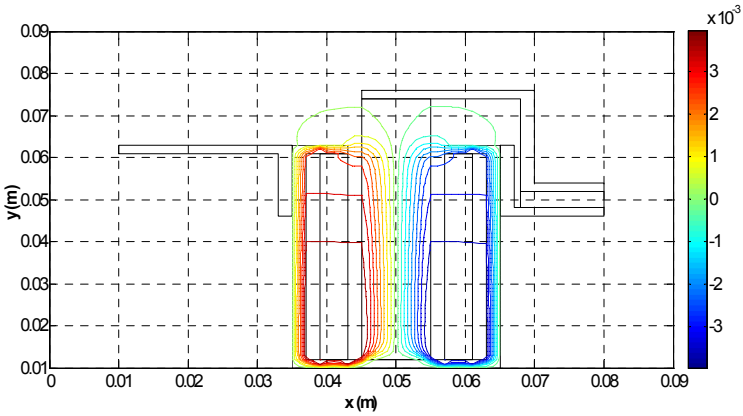

Fig. 6 – *The distribution of the electromagnetic vector potential (Closed crusher).*

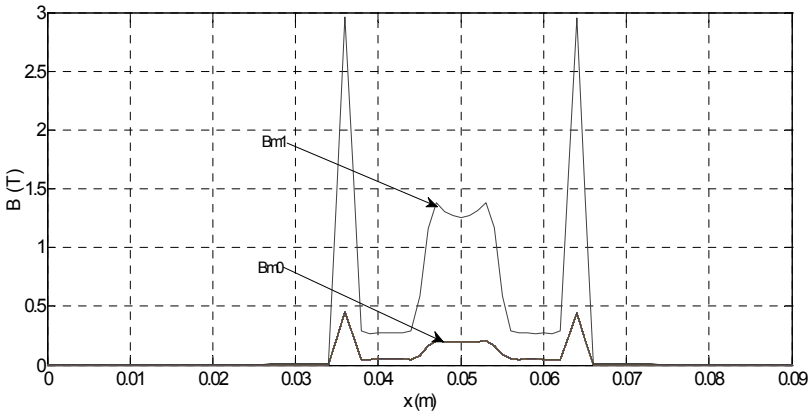

Fig. 7 – *Average flux density at the beginning* [$\boldsymbol{B}_{m0}$] *and at the end* [$\boldsymbol{B}_{m1}$] *of plunger movement.*

As shown on Fig. 3, by supplying the actuator the tube portion with the length l and the internal diameter 2*r* is crushed inducing a liquid transfer of one step.

If the actuators are activated continuously at a frequency f then liquid will be transferred to the output side of the tube at a rate *k* [m^3/s]; so that a quantity of ($\pi r^2 l$) is transferred per contraction or at a flow rate of:

$$k = \left(\pi r^2 l\right) f \,. \tag{11}$$

From the calculation it was found that:

- Around 0.6 ml of liquid are transferred at each actuator action;
- The flow rate (ml/min) is given by:

$$k = 36 f \,; \tag{12}$$

- The force developed by the electromagnetic actuator may be calculated using the approximated Maxwell's stress tensor expression [6].

$$\mathrm{d}F = \left(\frac{B^2}{2\mu}\right)\mathrm{d}S \,, \tag{15}$$

  where μ is the plunger material permeability and $\boldsymbol{B}$ is the flux density over the plunger cross section *S*;
- It is found that F = 56.44 N per unit surface and the developed pressure is P = 225.76 mbar.

The pump has been tested in a continuous and regular switching sequences, with non-compressible liquid, for frequencies ranging from zero to 9 Hz and with three voltages (14 V, 16 V, 18 V). The flow rates of the pump were

measured for different frequencies and voltages. The measured flow rates versus frequency are plotted on the same graph for different voltages and with the expected theoretical flow rate, as illustrated on Fig. 8.

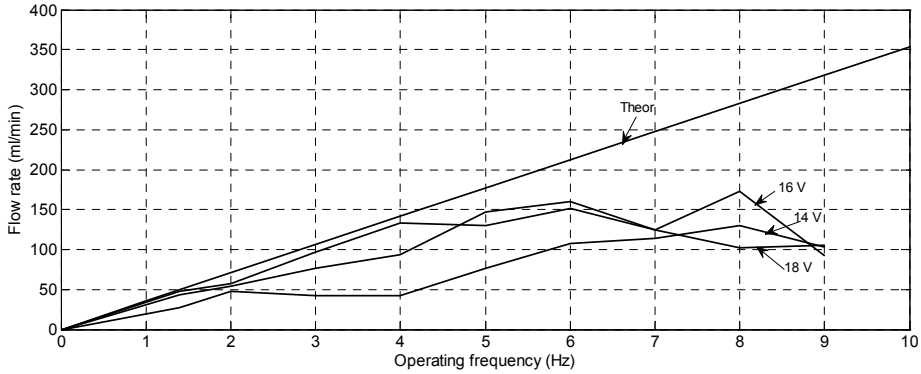

Fig. 8 – *Flow rate versus frequency.*

The curves show an increasing aspect that may be approximated to a linear function especially for frequencies less than 5 Hz and voltages more than 14 V. Two remarks may be noted from the curves:

- Actuator response is slow so it can't follow 'higher' frequencies (more than 5 Hz);
- Actuator crushing force is weak for low voltages (less than 14 V).

Practically, the pump shows some leaks (back flow) at sequence starting and at higher frequencies caused by the imperfect crushing of the tube at some jaw pairs (non-matched jaw pairs) and inadequate switching of the first and last actuators (borders problem). A loss of elasticity of the tube has been noted too; one is due, essentially, to the inherent heating of the actuators which may lead to a reduced aspiration capacity.

5 Conclusion

In this paper, the study and the design of a linear peristaltic pump prototype are presented. Some operating difficulties are noticed in order to improve the efficiency of the pump. Few actions are required as:

- Overheating and a loss of elasticity of the tube are to be avoided by adding appropriate heat sinks.
- Well matched pairs of crusher jaws must be used with precise adjustments to prevent liquid leakage.
- Soft material (plastic) is to be used to manufacture the crusher jaws to improve tube life time.

- Some changes in time delays and switching sequences are to be added to prevent boarder fluidic trouble.

Finally, the feasibility of a linear peristaltic pump using electromagnetic actuators has been verified, a comparison of the experimental measurement with the theoretical expectation shows a good agreement within a frequency range less than 5Hz and voltages more than 14 V. With the prelisted improvements, a practical application of the pump in fluid-supplying systems is possible.

6 References

[1] Dae-Sik Lee, Jong Soo Ko, Youm Tae Kim: Bidirectional Pumping Properties of a Peristaltic Piezoelectric Micropump With Simple Design and Chemical Resistance, Thin Solid Films, Vol. 468, No. 1–2, 2004, pp. 285–290.

[2] Hanseup Kim, Aaron A. Astle, Khalil Najafi, Luis P. Bernal, Peter D. Washabaugh: A Fully Integrated High-Efficiency Peristaltic 18 Stage Gas Micro Pump with Active Microvalves, Proceedings IEEE 20th International Conference on Micro Electro Mechanical Systems, 2007, Kobe, Japan, 21–25, January 2007, pp. 322–326.

[3] Mir Majid Taimoori, Ebrahim Abdaspour-Sani: Design and Simulation of a Novel Electrostatic Peristaltic Micromachined Pump for Drug Delivery Applications, Sensors and Actuators A, Vol. 117, 2005, pp: 222–229.

[4] Eui-Gyu Kim, Joe-geun Oh, Bumkyoo Choi: A study on the development of a continuous peristaltic micropump using magnetic fluids, Sensors and Actuators A: Physical, Vol. 128, No.1, March 2006, pp. 43 –51.

[5] Versteeg H.K, Malalasekera W: An Introduction to Computational Fluid Dynamics: The Finite Volume Method, 2nd Edition, Pearson Prentice Hall, 2007.

[6] Nicola Bianchi: Electrical Machine Analysis Using Finite Elements, Editions Taylor and Francis, 2005.